www.anrecson.com.cn

LC-ME2201-E
(22" HDMI/VGA Plastic Case Monitor)





Product Feature

- Industrial level DID LCD panel, suitable for extensive 7×24 continuous works.
- Physical resolution of 1920×1080.
- 5ms fast response time, no image ghosting.
- Adapt newest 3D digital filtering and 3D digital noise reduction technology.
- Picture fast response; 178° wide viewing angle; Ensure that the image display is not deformed.
- High fidelity digital processing, brilliant and vivid video.
- Built-in speaker.
- Humanize Menu;

DNIe digital image processing

Dynamic optimization



Natural color



Contrast enhancement



Detail enhancement



Wide Viewing Angles(Up to 178)



178 (H)/178 (V)

DISPLAY CHARACTERISTICS

Mode Name	LC-ME2201-E
Screen Size	22''
Active Display Area (mm)	476.64mm(W)×268.11mm(H)
Display Mode	16:9
LED Type	TFT-LED
Resolution	1920 × 1080
Display Color	16.7M
Pixel Pitch(mm)	0.248(H)×0.248(V)
Brightness(nits)	250cd/
Contrast Ratio	1000:1
Viewing Angle	178(H) /178(V)
Response Time	5ms
Backlight	LED

INPUT&OUTPUT

HDMI 2.0	1
VGA	1
Speaker	NO

VIDEO

Color System	PAL/NTSC/SECAM
OSD Control	Auto adjust, Brightness, Contrast, Hori. / Vert. Position, Clock, phase, Color, Language..
3D comb filter	YES
Video Noise Reduction	YES

POWER&Mount Way

Power	DC12V,50/60Hz
Working Temperature	-30 to +85 ℃
Power Consumption	25W
Menu	English(other languages supported)
Mounting/Weight	Stand mount, VESA mount/3.5kg
MTBF	50000Hours
Certificate Approval	CE,RoHS,CCC,FCC,ISO9000, UL
Application	Monitoring , Transportation, Controlling room, ETC

ACCESSORIES

INCLUDED ACCESSORIES	Industrial PSU,Screw, Cable holder, Quick start guide

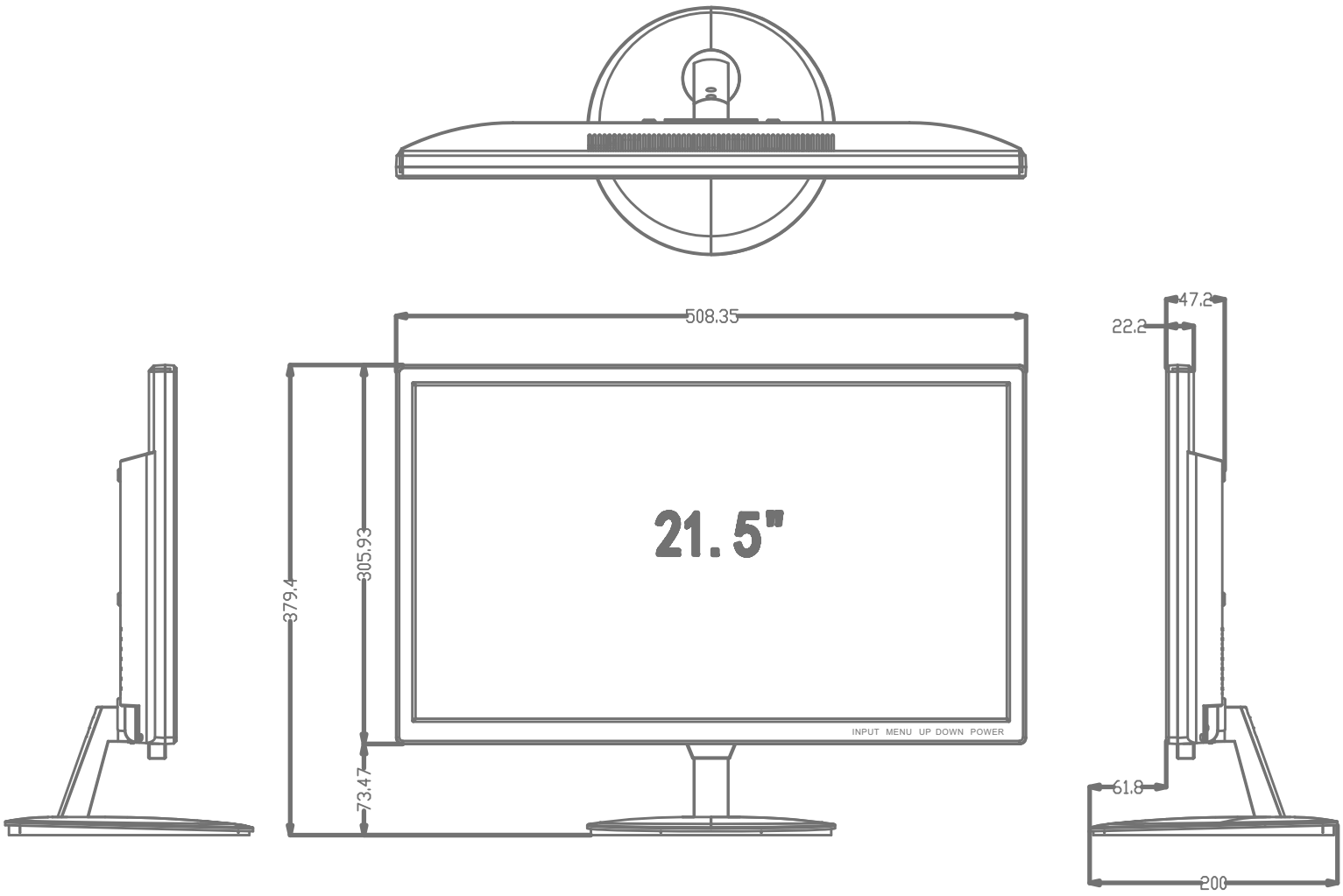

Unit:mm

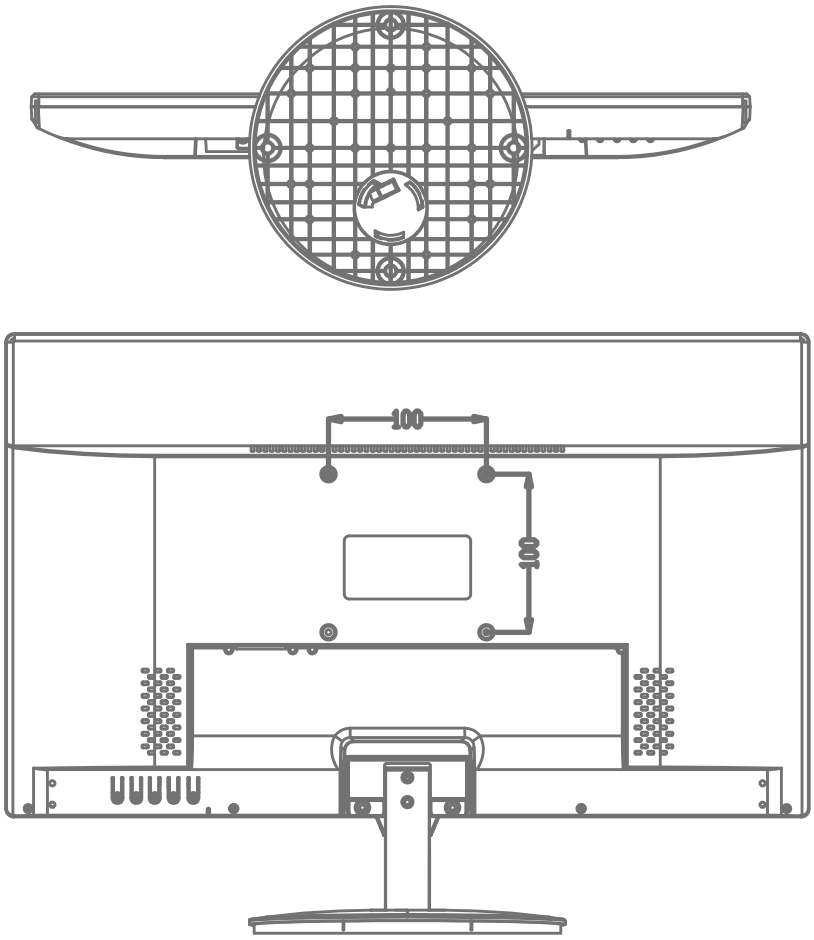

All trademarks and registered trademarks acknowledged. E & O E. Specification subject to change without notice.
All LCD's comply with ISO-9241-307:2008 in connection with pixel defects.

© ANRECSON CORPORATION ( ). ALL RIGHTS RESERVED.